Project Name: MAHARASHTRA NATURAL GAS LTD, Tender for Rate Contract for the period of 1-year for procurement of ½", 1" & 1.5" Isolation Ball Valve and 1/4" Appliance Ball Valve for CGD Network of Pune, Nashik, Sindhudurg, Ramanagara, Nanded and Nizamabad GA of MNGL.

Tender No. Bid No.: MNGL/CP/2022-23/145

Due Date: 23/12/2022

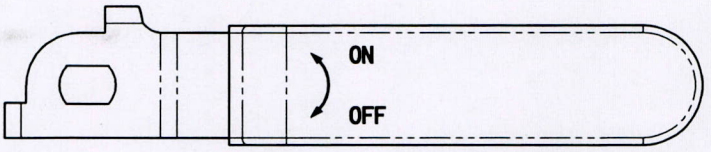

DIMENSION TABLE	
SIZE	1-1/2
L	103±1
L1(Min.)	23±0.5
L2(Min.)	23±0.5
A	1-1/2" NPT
B	1-1/2" NPT
C	130±5
D	40±1
S	53±0.5

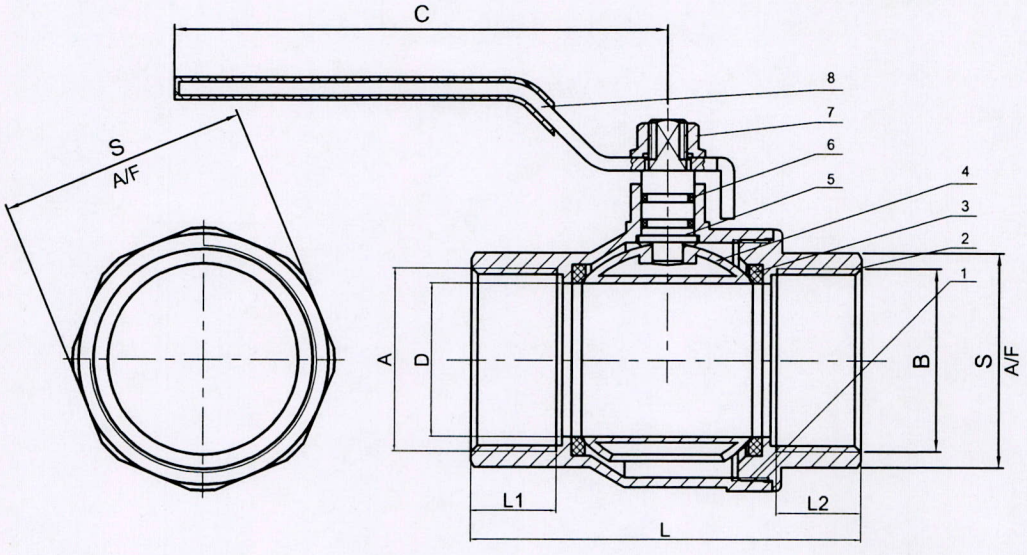

Technical requirements:
1.Before assembling,all parts should be clean,no burrs,no flash;
2.Bonnet should be coated with sealant before assembling;
3.handle should be open and closed freely;
4.Wide open ball valve,the through hole axis angle between valve body and ball not larger than 3°;
5.The closeure testing should be carried out at least testing pressure not less than 0.6Mpa
6.Manufactureing specification as prer EN331;
7.Threading as per ASME B1.20.1.

NO.	Item Name	QTY	Material
1	Body	1	Brass
2	Bonnet	1	Brass
3	Gasket	2	PTFE
4	Ball	1	Brass
5	Stem	1	Brass
6	O-Ring	2	NBR
7	SCREW/NUT	1	STEEL
8	Handle	1	STEEL

TECHNICAL SPECIFICATIONS	
MEDIUM	NATURAL GAS
END CONNECTION	1-1/2",2"NPT(F) at both inlet and Outlet
OPERATING PRESSURE	4bar(g)
OPERATING TEMPERATURE	0°C TO 45°C
DESIGN PRESSURE	6bar(g)
DESIGN TEMPERATURE	0°C TO 65°C
OPERATOR	Lever Type Handle
MATERIAL OF CONSTRUCTION	BODY /BONNET/ BALL :FORGED BRASS

COMPANY NAME:

For Tender Purpose only

TITAL:

ISOLATION BALL VALVE
1-1/2"

DW NO. :

Project Name: MAHARASHTRA NATURAL GAS LTD, Tender for Rate Contract for the period of 1-year for procurement of ½", 1" & 1.5" Isolation Ball Valve and 1/4" Appliance Ball Valve for CGD Network of Pune, Nashik, Sindhudurg, Ramanagara, Nanded and Nizamabad GA of MNGL.

Tender No. Bid No.: MNGL/CP/2022-23/145

Due Date: 23/12/2022

DIMENSION TABLE	
SIZE	1
L	81±1
A	1" NPT
B	1" NPT
C	60.5±1.5
D	25±1
S	37.8±0.5

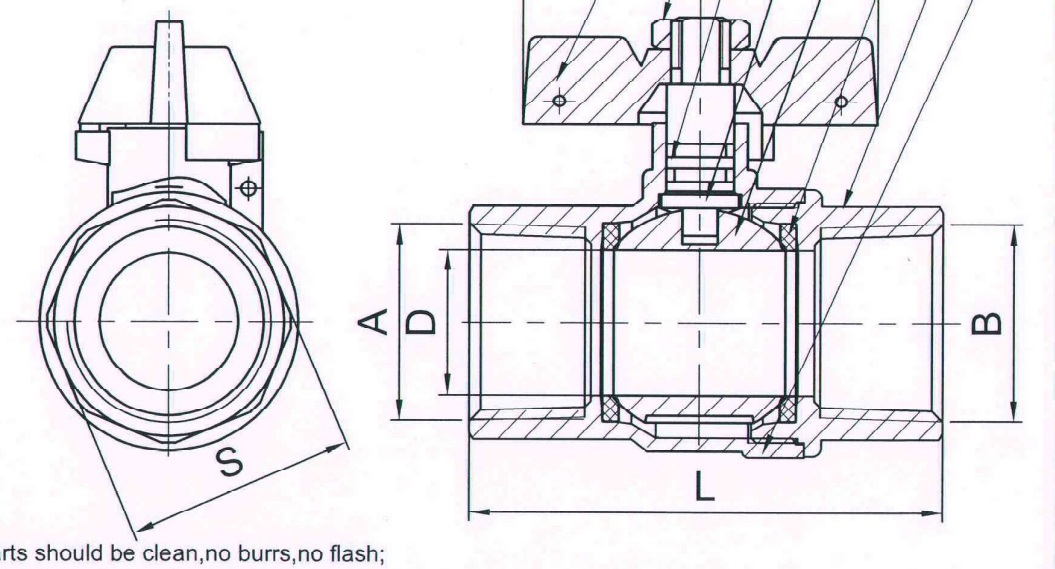

Technical requirements:
1.Before assembling,all parts should be clean,no burrs,no flash;
2.Bonnet should be coated with sealant before assembling;
3.handle should be open and closed freely;
4.Wide open ball valve,the through hole axis angle between valve body and ball not larger than 3°;
5.The closeure testing should be carried out at least testing pressure not less than 0.6Mpa by air.
6.Manufactureing specification as prer EN331;
7.Threading as per ASME B1.20.1.

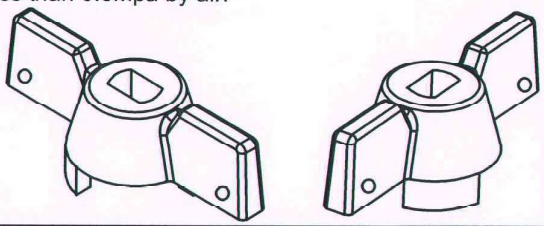

NO.	Item Name	QTY	Material
1	Body	1	Brass
2	Bonnet	1	Brass
3	Gasket	2	PTFE
4	Ball	1	Brass
5	Stem	1	Brass
6	O-Ring	2	Rubber
7	SCREW/NUT	1	STEEL
8	Handle	1	AL

TECHNICAL SPECIFICATIONS

MEDIUM	NATURAL GAS
END CONNECTION	1"NPT(F) at both inlet and Outlet
OPERATING PRESSURE	4bar(g)
OPERATING TEMPERATURE	0°C TO 45°C
DESIGN PRESSURE	6bar(g)
DESIGN TEMPERATURE	0°C TO 65°C
OPERATOR	Butterfly Handle With Locking Arrangment
MATERIAL OF CONSTRUCTION	BODY /BONNET/ BALL : FORGED BRASS

COMPANY NAME:

For Tender Purpose Only

TITAL:

ISOLATION BALL VALVE
1" NPT A6101

DW NO. :

10.61151.N25.CP02-2922