SLD EMERGENCY PANEL

FOR TENDER PURPOSE ONLY

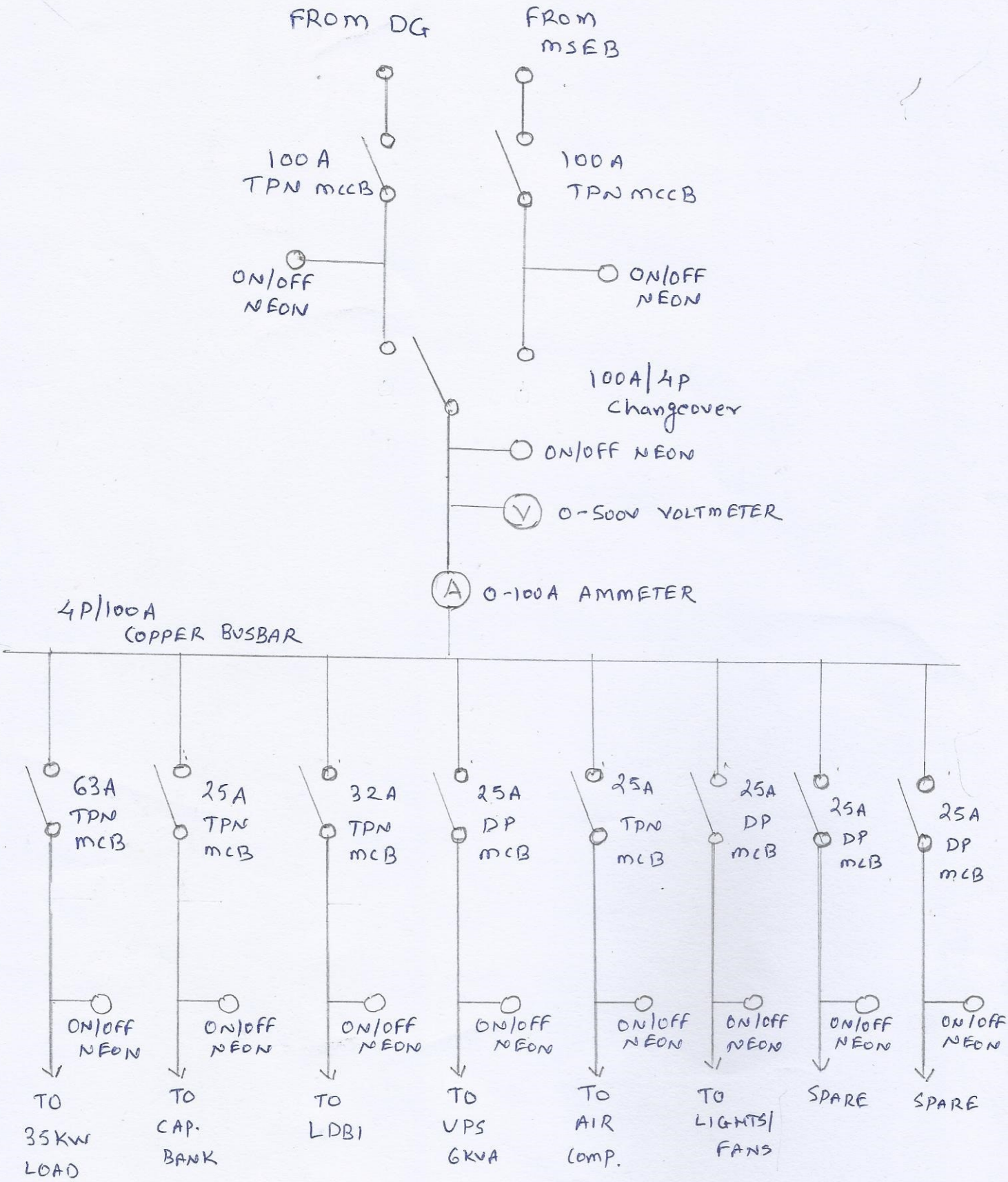

MAHARASHTRA NATURAL GAS LTD
PUNE

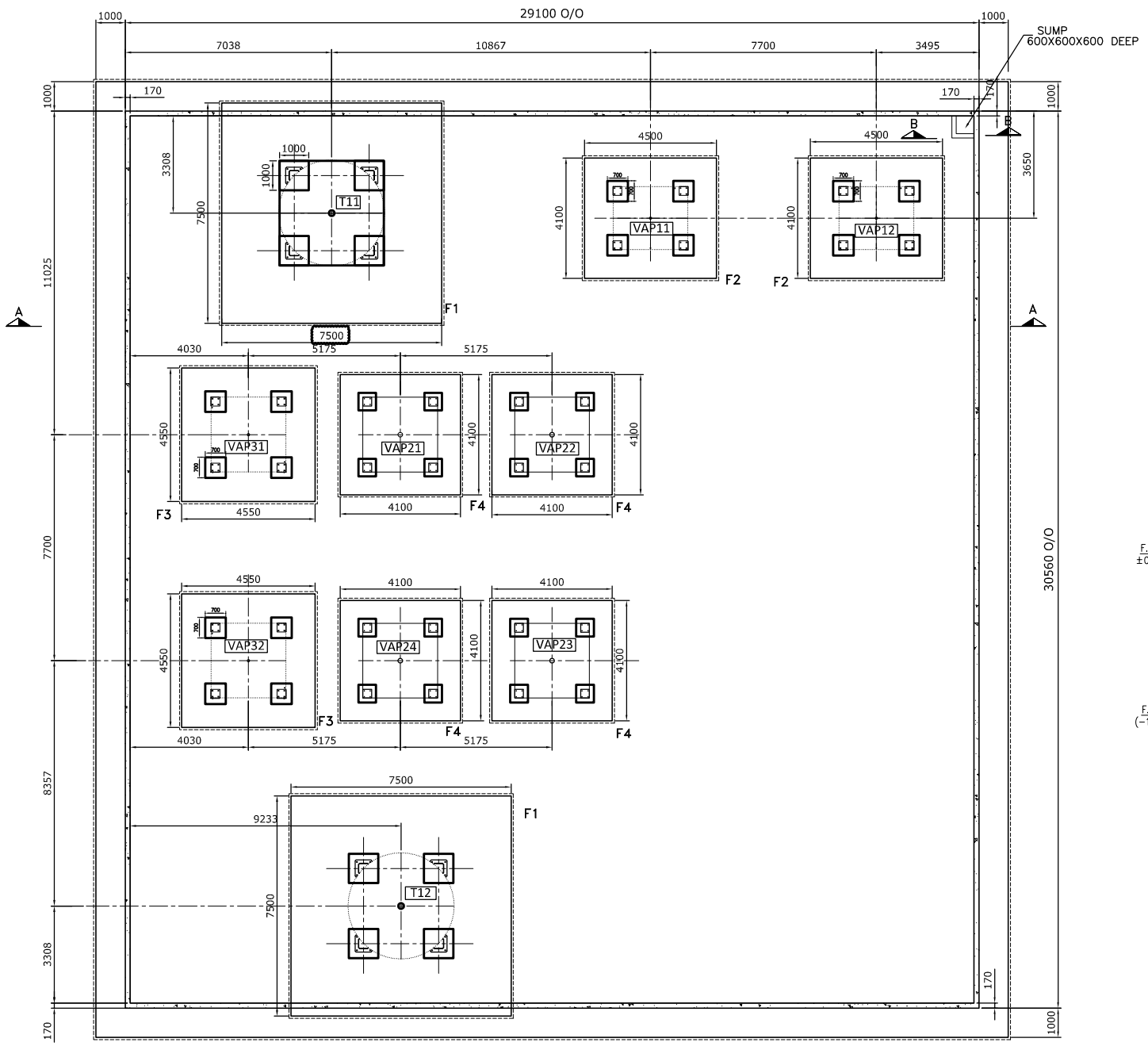

01 FOUNDATION LAYOUT FOR DYKE AREA
SCALE:- 1:100

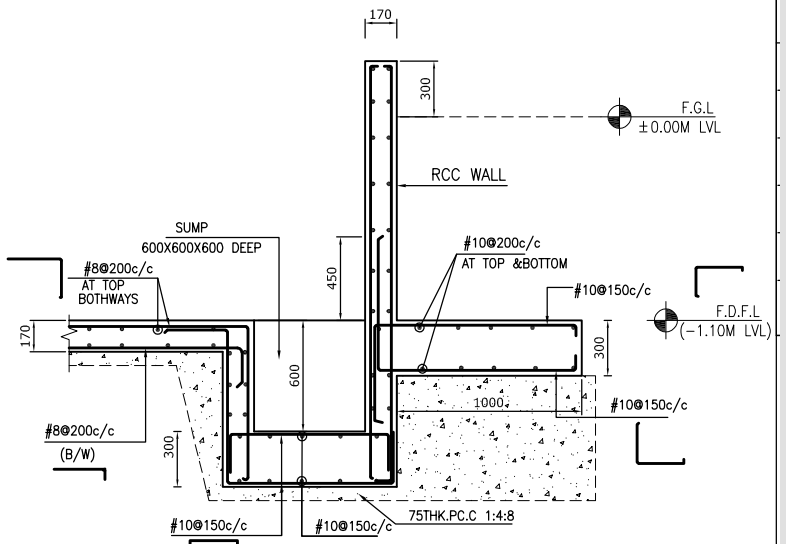

4 SECTION:B-B DETAIL OF SUMP
SCALE:- 1:20

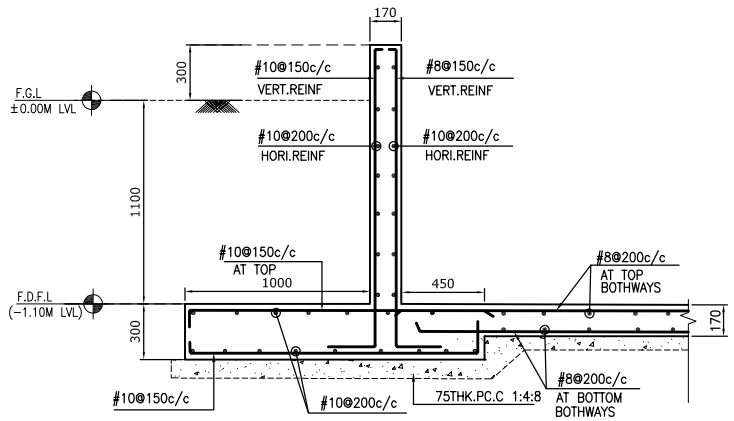

3 RCC WALL DETAIL
SCALE:- 1:20

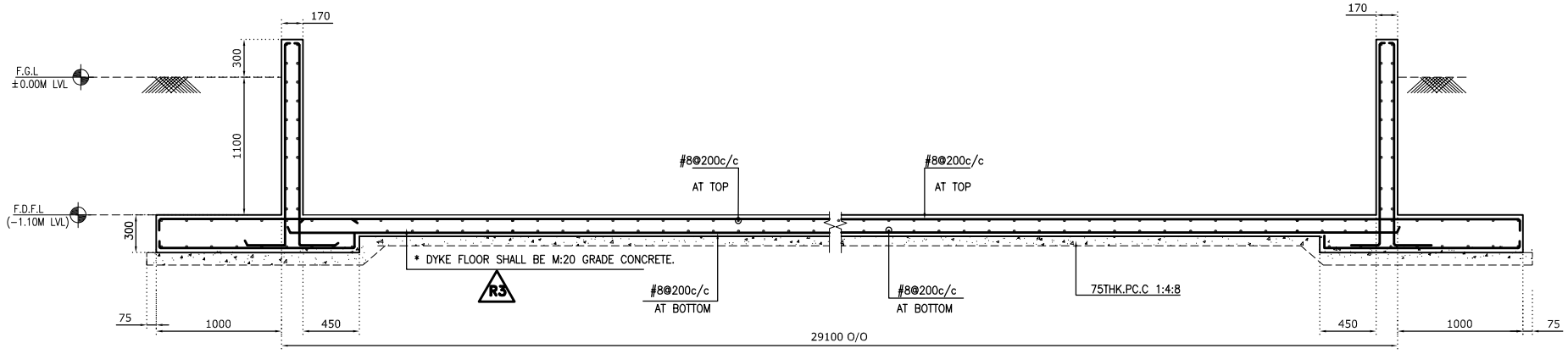

2 SECTION:A-A
SCALE:- 1:25

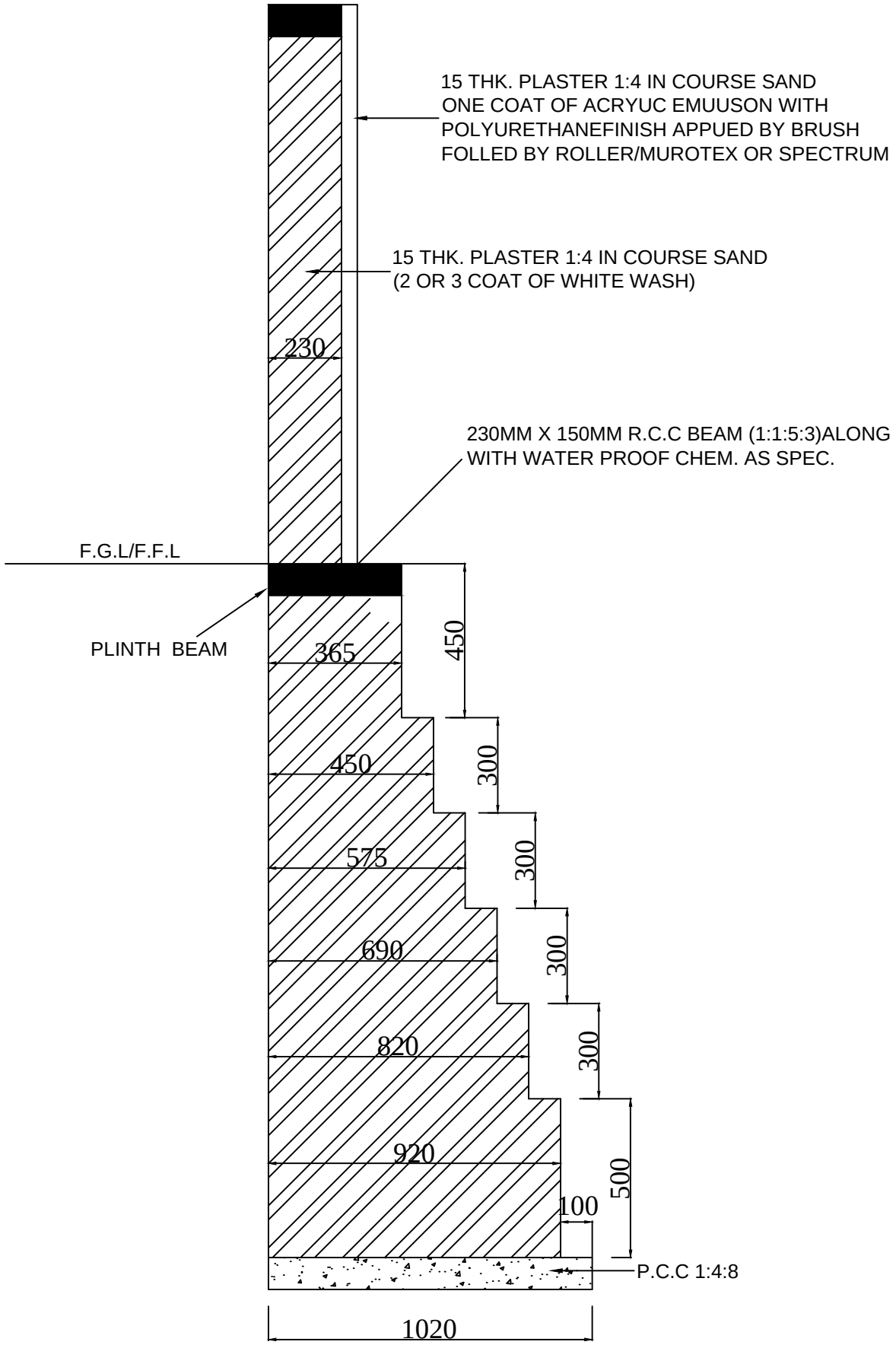

FOR TENDER PURPOSE ONLY

TITLE:-	DSGN:	CHKD. & VERIFIED:	MNGL	MAHARASTRA NATURAL GAS LIMITED	NORTH
BOUNDARY WALL DETAIL	DRWN:	APPROVED:	CNG & CITY GAS DISTRUBUTION NETWORK PUNE		DATE

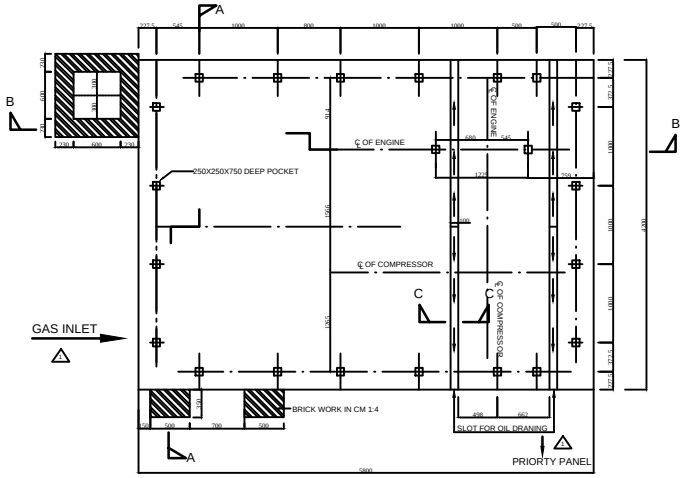

FOUNDATION PLAN OF 1200 SCMH
GAS DRIVEN COMPRESSOR

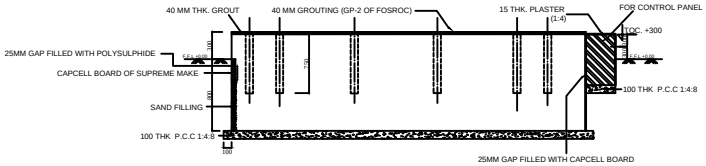

SECTION A - A
(SHUTTERING DETAILS)

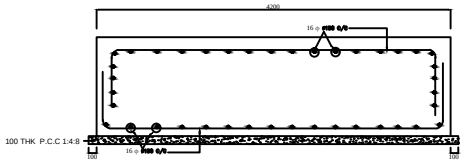

SECTION A - A
(FOR DETAIL OF REINF.)

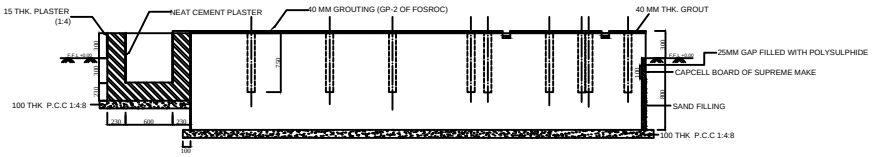

SECTION B - B
(SHUTTERING DETAILS)

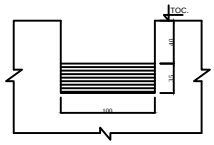

SECTION C - C

FOR TENDER PURPOSE ONLY

TITLE:- SHUTTERING & REINFORCEMENT DETAILS OF 1200 SCMH GAS ENGINE DRIVEN COMPRESSOR FOUNDATION (KIRLOSKAR MAKE)	DSGN:	CHKD. & VERIFIED:	MNGL MAHARASTRA NATURAL GAS LIMITED	NORTH
	DRWN:	APPROVED:	CNG & CITY GAS DISTRUBUTION NETWORK PUNE	DATE

GENERAL NOTES

1. ALL DIMENSIONS ARE IN m.m.
2. ALL FILLET WELDS ARE 6 mm THICK UNLESS NOTED OTHERWISE.
3. ALL ERECTION HOLES ARE SHOWN THERE
4. ALL PERMANENT HOLES ARE SHOWN THERE
5. ALL MEMBER AND GUSSET PLAT SHOULD BE VERRIFIED BY FULL SCALE SHOP LAYOUT.
6. HOLE CONNECTION SIZE

a	PURLIN ANGLE TO CLEATS-Ø14 -M 12X45 kg.
b	PURLIN JOINTS-Ø14 -M12X45 kg.
c	FACIA FRAME TO TRUSS -Ø14 M12X45kg.
d	TRUSS TO BEAM / COLUMN-Ø28 M22X65kg.
e	BEAM TO BEAM / COLUMN-Ø28 M22X65kg.
f	FOUNDATION FOR COLUMN-Ø44-M40.

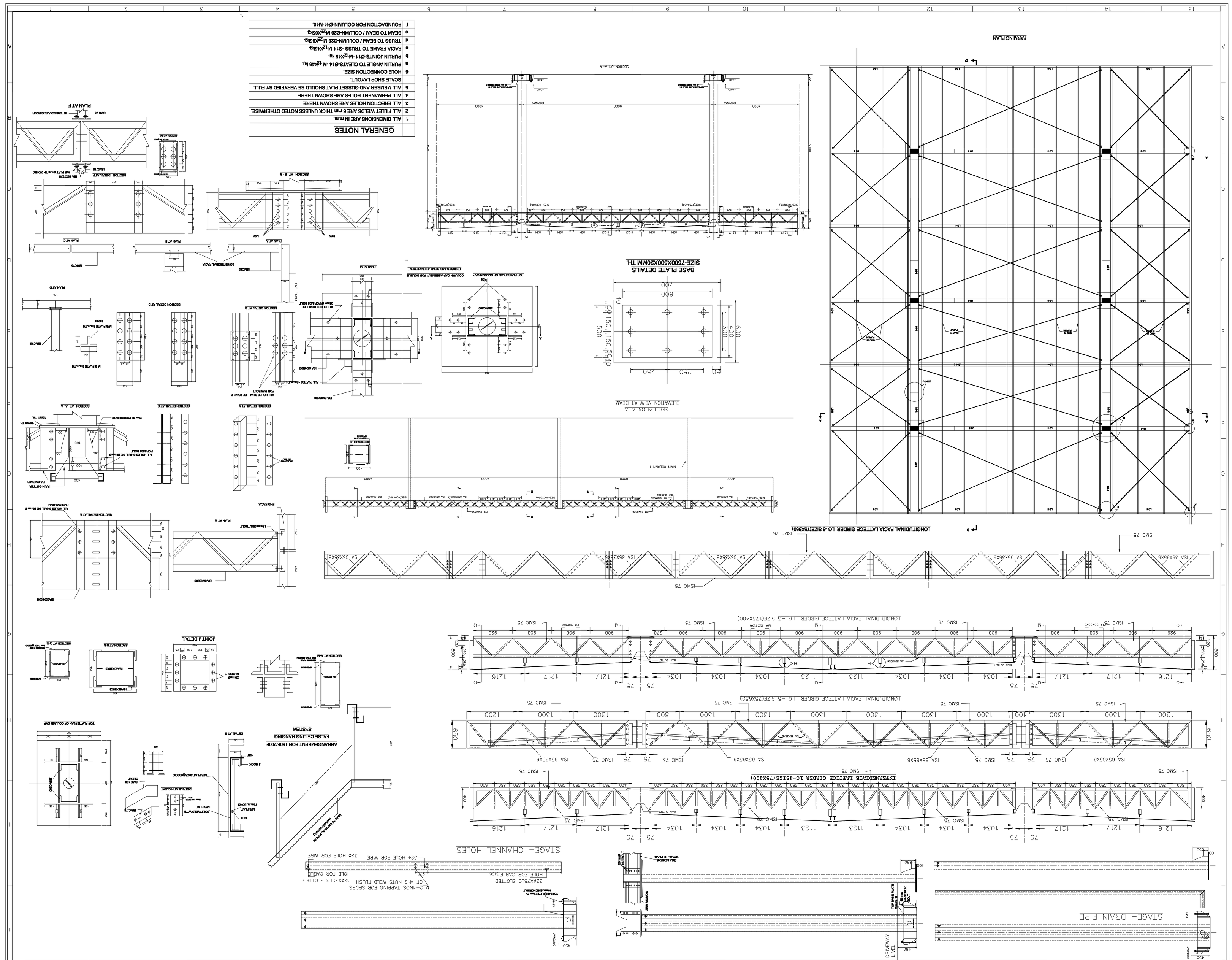
FARMING PLAN
LONGITUDINAL FACIA LATTICE GIRDER LG-8 SIZE(75X650)
LONGITUDINAL FACIA LATTICE GIRDER LG-3 SIZE(175X400)
LONGITUDINAL FACIA LATTICE GIRDER LG-5 SIZE(75X650)
INTERMEDIATE LATTICE GIRDER LG-4SIZE(75X400)
BASE PLATE DETAILS
SIZE-7500X500X20MM TH.
SECTION ON A-A
ELEVATION VIEW AT BEAM
SECTION AT B-B
SECTION AT A-A
SECTION AT B-B
SECTION AT G-G
JOINT J DETAIL
ARRANGEMENT FOR 160T/200T FALSE CEILING HANGING SYSTEM
STAGE- CHANNEL HOLES
STAGE- DRAIN PIPE
DRIVEWAY LEVEL
TOP PLATE PLAN OF COLUMN CAP
COLUMN CAP ASSEMBLY FOR DOUBLE TRUSSES AND BEAM ATTACHEMENT
SECTION AT A-B
SECTION AT M-M
SECTION AT N-N
SECTION AT O-O
SECTION AT P-P
SECTION AT Q-Q
SECTION AT R-R
SECTION AT S-S
SECTION AT T-T
SECTION AT U-U
SECTION AT V-V
SECTION AT W-W
SECTION AT X-X
SECTION AT Y-Y
SECTION AT Z-Z
SECTION AT A-B
SECTION AT B-B
SECTION AT C-C
SECTION AT D-D
SECTION AT E-E
SECTION AT F-F
SECTION AT G-G
SECTION AT H-H
SECTION AT I-I
SECTION AT J-J
SECTION AT K-K
SECTION AT L-L
SECTION AT M-M
SECTION AT N-N
SECTION AT O-O
SECTION AT P-P
SECTION AT Q-Q
SECTION AT R-R
SECTION AT S-S
SECTION AT T-T
SECTION AT U-U
SECTION AT V-V
SECTION AT W-W
SECTION AT X-X
SECTION AT Y-Y
SECTION AT Z-Z
PLAN AT A
PLAN AT B
PLAN AT C
PLAN AT D
PLAN AT E
PLAN AT F
PLAN AT G
LONGITUDINAL FACIA
END FACIA
ISMC 75
ISA 65X65X6
ISA 35X35X5
ISA 65X65X6
ISA 65X65X6
ISA 65X65X6

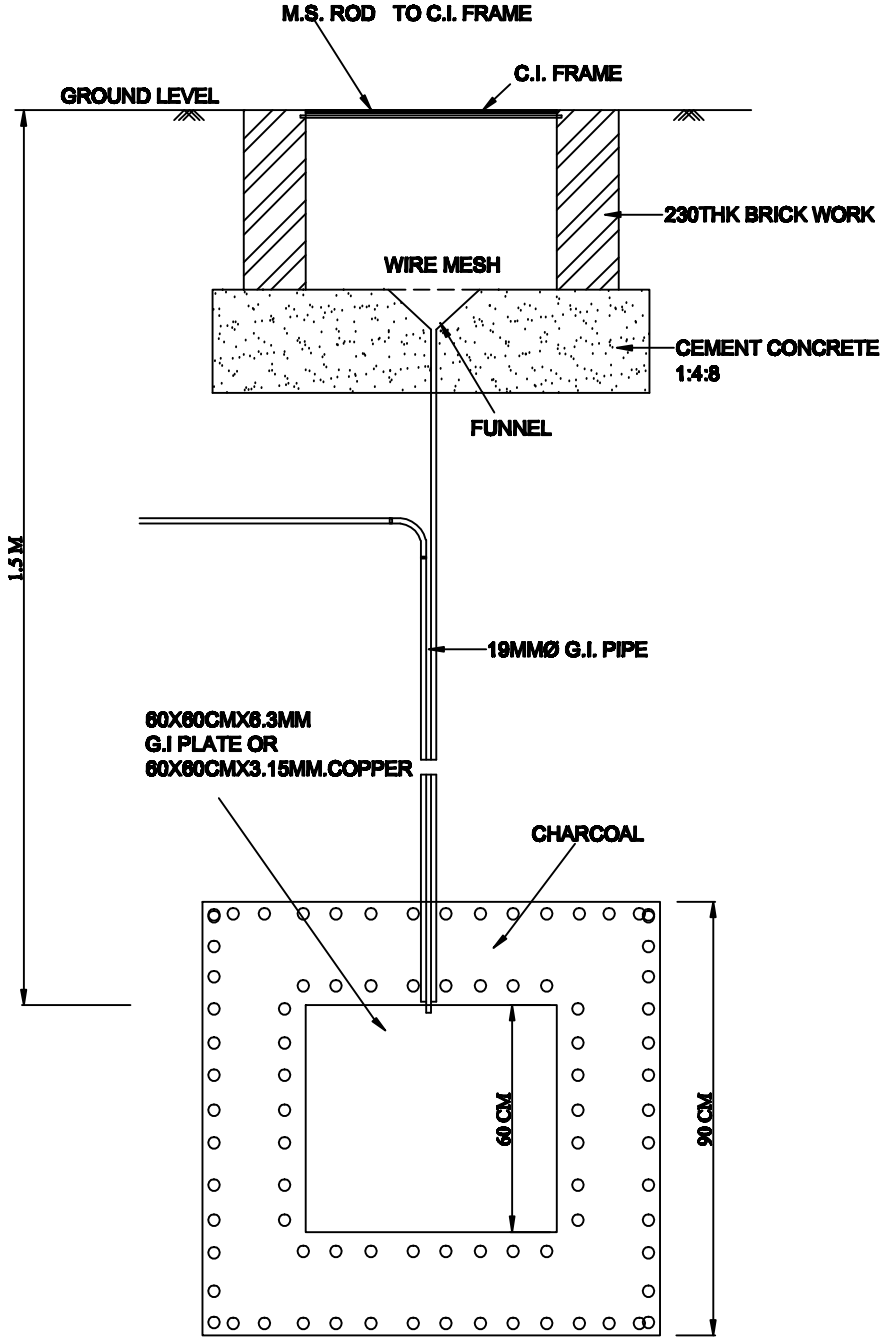

TYPICAL PLATE EARTHING DETAILS

FOR TENDER PURPOSE ONLY

TITLE:-	DSGN:	CHKD. & VERIFIED:	MNGL	MAHARASTRA NATURAL GAS LIMITED	NORTH
TYPICAL PLATE EARTHING DETAILS	DRWN:	APPROVED:	CNG & CITY GAS DISTRUBUTION NETWORK PUNE		DATE

PRODUCED BY AN AUTODESK EDUCATIONAL PRODUCT

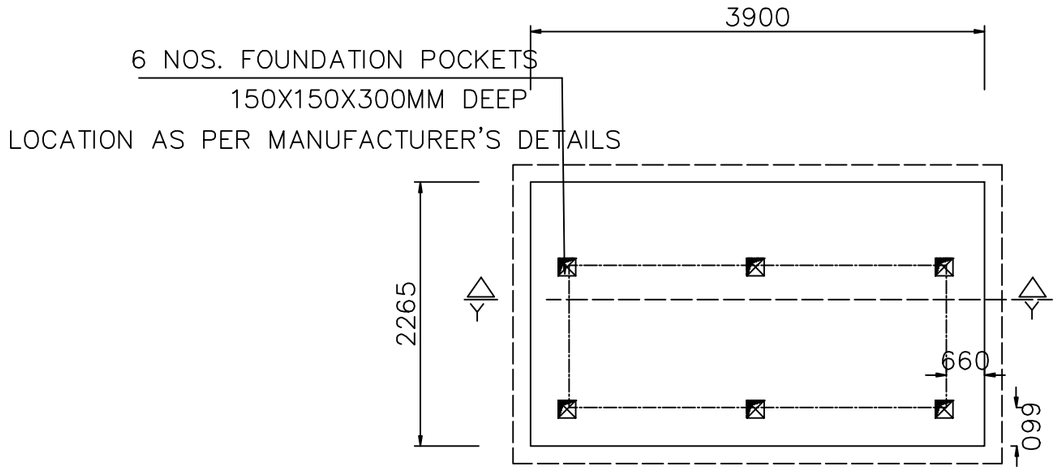

KEY PLAN
FOUNDATION FOR
STATIONARY CASCADE

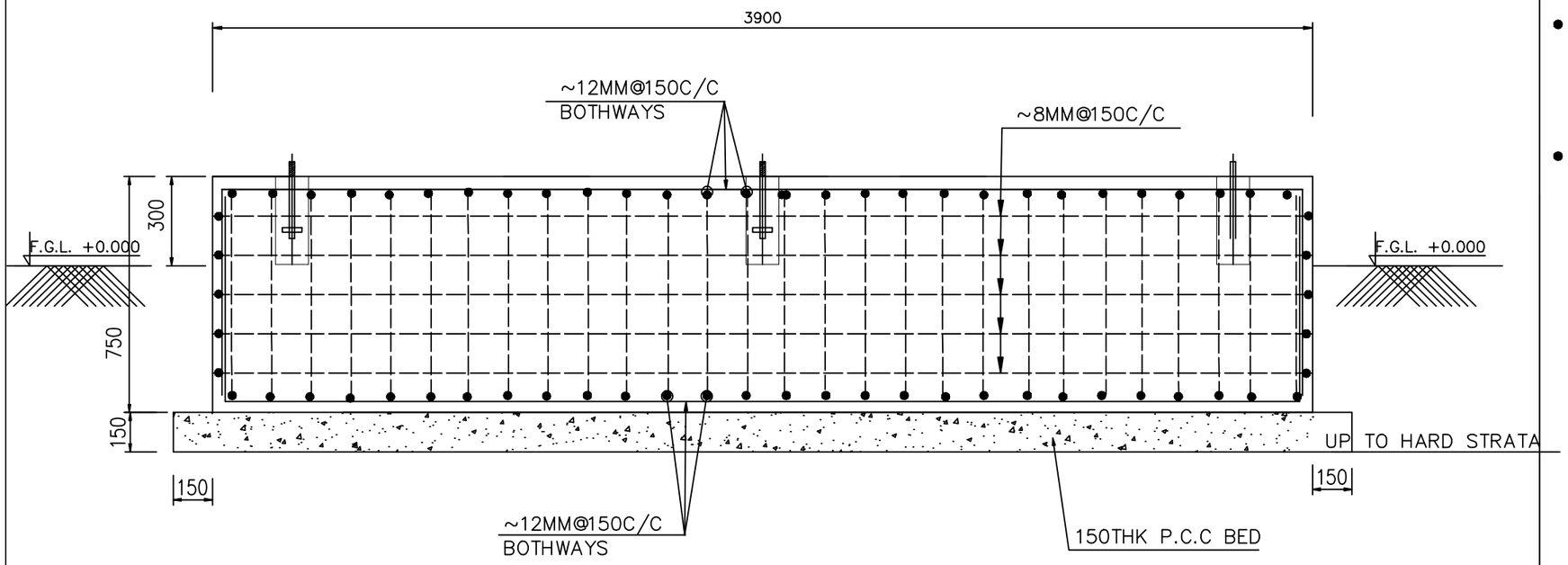

SECTION–Y..Y

NO	DATE	REVISIONS:

NOTES:

- FOR GEOMETRIC DIMENSIONS REFER TO ARCHITECT'S DRAWINGS.
- CONCRETE MIX FOR R.C.C. WORK: M–20 UNLESS STATED OTHERWISE.
- CLEAR COVER TO MAIN REINFORCEMENT
  FOOTING=50mm,COLUMNS=40mm
  BEAMS=30mm,SLABS=25mm
  PILES=50mm
- ALL REINFORCEMENT TO BE C.T.D BARS GRADE Fe–415 EXCEPT ø6 mm IN MILD STEEL.
- SAFE BEARING CAPACITY OF SOIL ASSUMED: TO BE ASCERTAINED BEFORE CONCRETING.
- BUILDING DESIGNED FOR:
  LAPS FOR MAIN REINFORCEMENT
  COLUMNS:–46X DIA OF BAR
  BEAMS & SLABS – 60X DIA OF BAR.
  NO LAPS IN FOOTING REINFORCEMENT.
- CENETRING SHALL BE THE RESPONSIBILITY OF CONTRACTOR.

FOR TENDER
PURPOSE ONLY

PRODUCED BY AN AUTODESK EDUCATIONAL PRODUCT
PRODUCED BY AN AUTODESK EDUCATIONAL PRODUCT
PRODUCED BY AN AUTODESK EDUCATIONAL PRODUCT

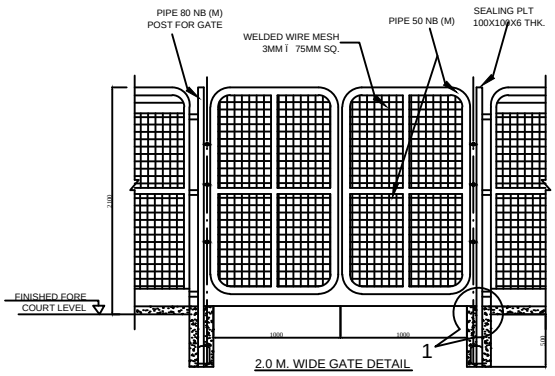

2.0 M. WIDE GATE DETAIL

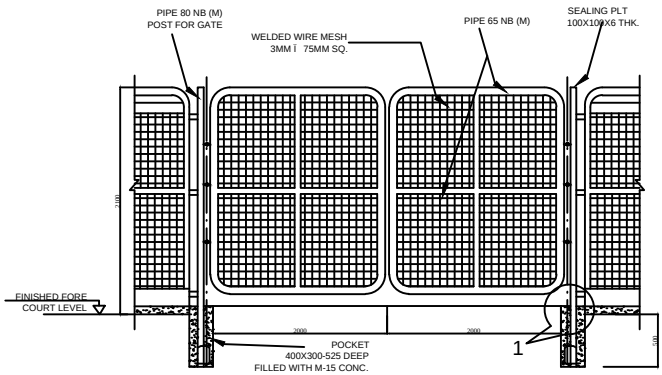

4.0 M. WIDE GATE DETAIL

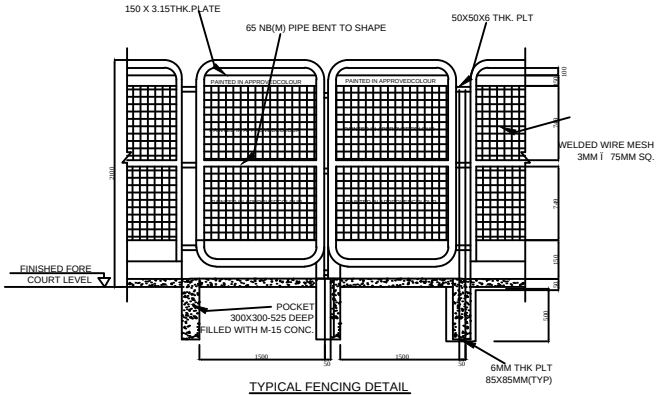

TYPICAL FENCING DETAIL

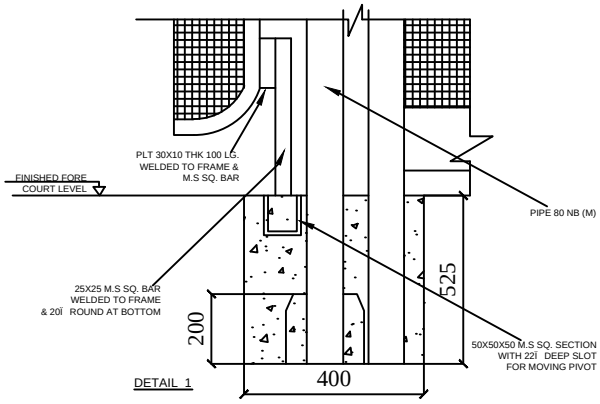

DETAIL 1

TITLE:- TYPICAL DETAIL OF GATE & FENCING (2100 MM HIGH)	DSGN:	CHKD. & VERIFIED:	MNGL MAHARASTRA NATURAL GAS LIMITED	NORTH
	DRWN:	APPROVED:	CNG & CITY GAS DISTRUBUTION NETWORK PUNE	DATE

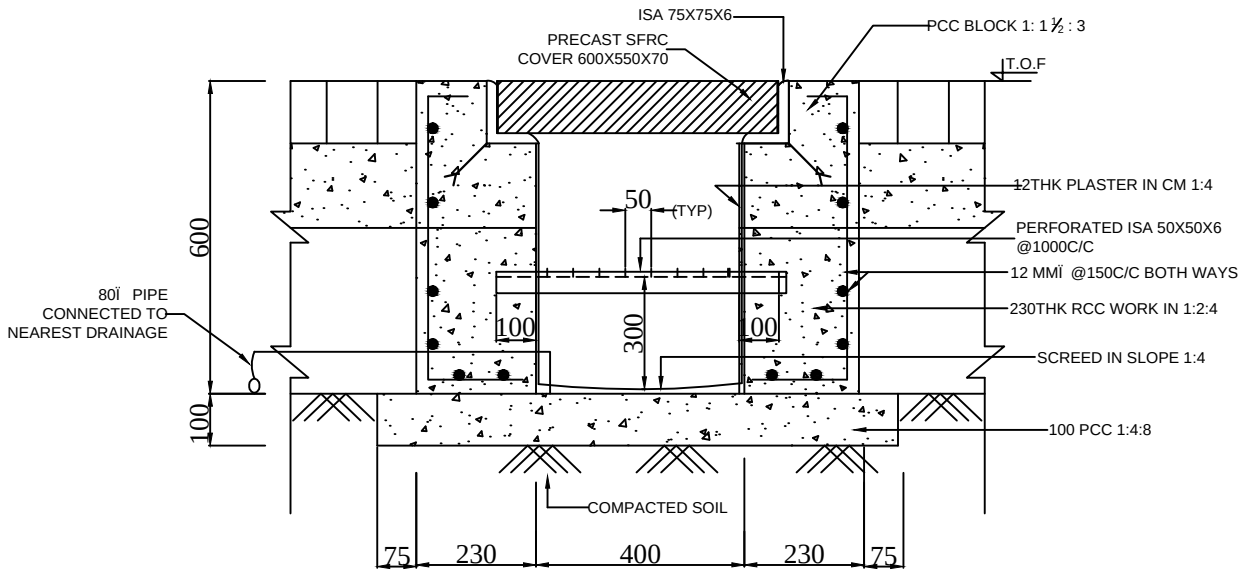

TYPICAL DETAIL OF SINGLE SS TUBE TRENCH

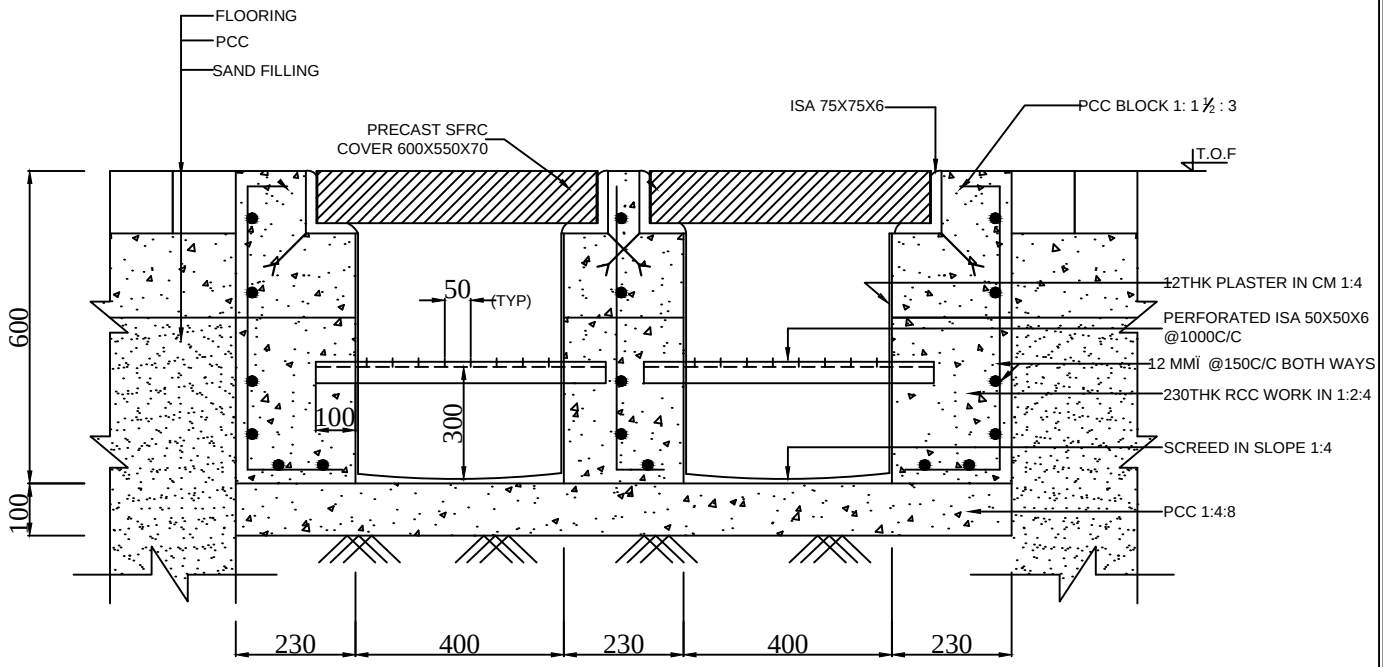

TYPICAL DETAIL OF DOUBLE SS TUBE TRENCH

NOTE:-

1. ALL DIMENSIONS ARE IN MM & LEVELS ARE IN M.
2. FOR LOCATION OF TRENCH REFER LAYOUT DRG.

FOR TENDER PURPOSE ONLY

TITLE:-	DSGN:	CHKD. & VERIFIED:	MNGL	MAHARASTRA NATURAL GAS LIMITED	NORTH
TYPICAL DETAIL OF SS TUBE TRENCH	DRWN:	APPROVED:	CNG & CITY GAS DISTRUBUTION NETWORK PUNE		DATE

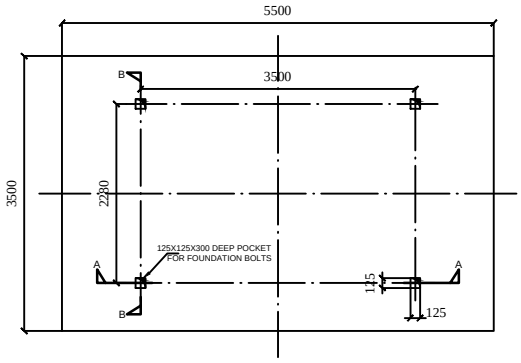

FOUNDATION PLAN OF 1200 SCMH & 750 SCMH
ELECTRIC MOTOR DRIVEN COMPRESSOR

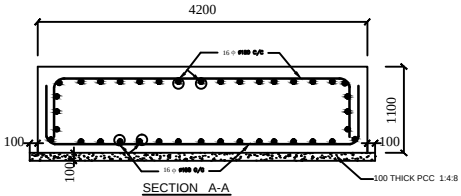

SECTION A-A
FOR DETAIL OF REINF.

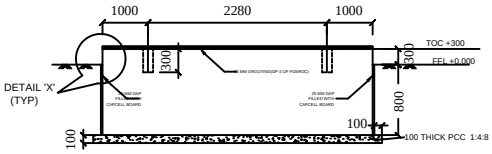

SECTION B-B
(SHUTTERING DETAILS)

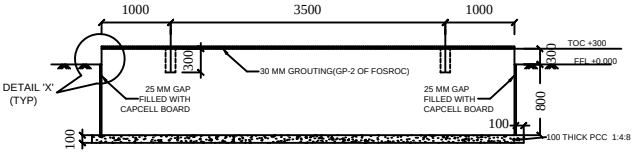

SECTION A-A
(SHUTTERING DETAILS)

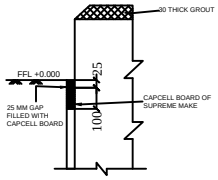

DETAIL 'X' (TYP)

TITLE:- SHUTTERING & REINFORCEMENT DETAIL OF 1200 & 750 SCMH MOTER DRIVEN COMPRESSOR FOUNDATION (KIRLOSKAR MAKE)	DSGN:	CHKD. & VERIFIED:	MNGL	MAHARASTRA NATURAL GAS LIMITED	NORTH
	DRWN:	APPROVED:	CNG & CITY GAS DISTRUBUTION NETWORK PUNE		DATE

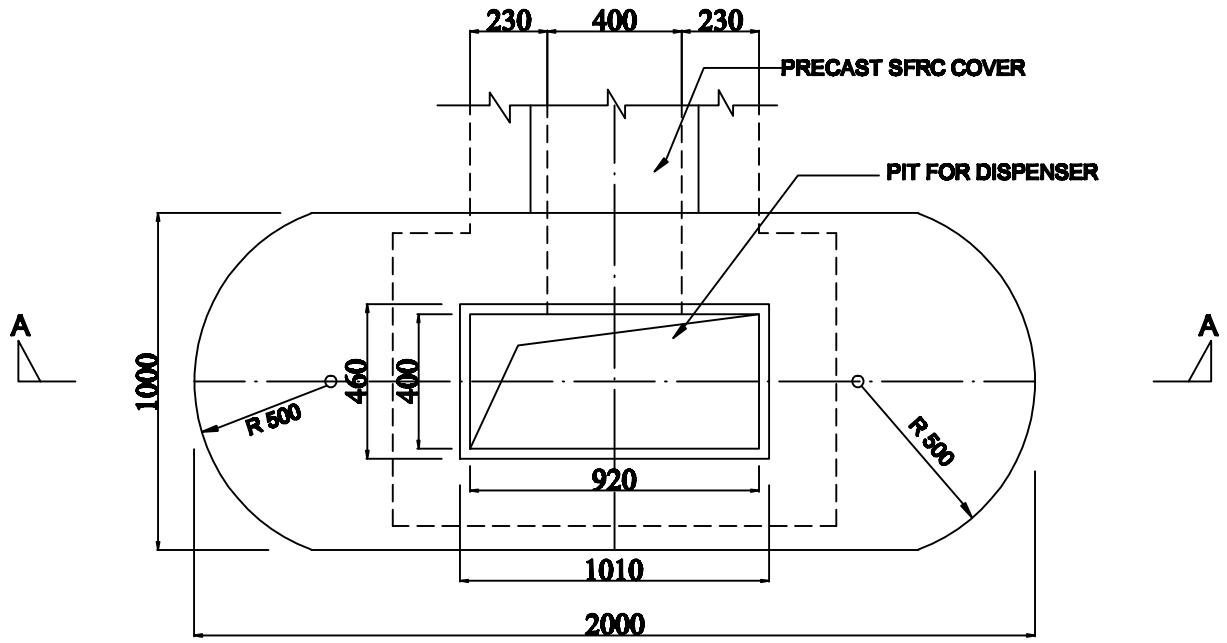

PLAN OF DISPENSER ISLAND

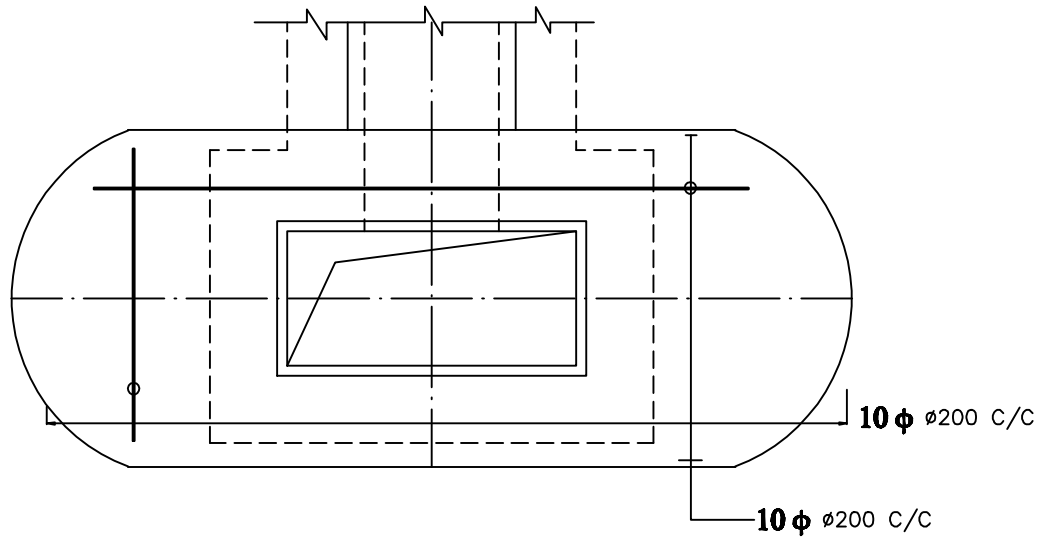

REINF. DETAIL OF DISPENSER ISLAND BASE SLAB

(REINFORCEMENT TO BE SUITABLY CUT & ADJUSTED AROUND OPENIG)

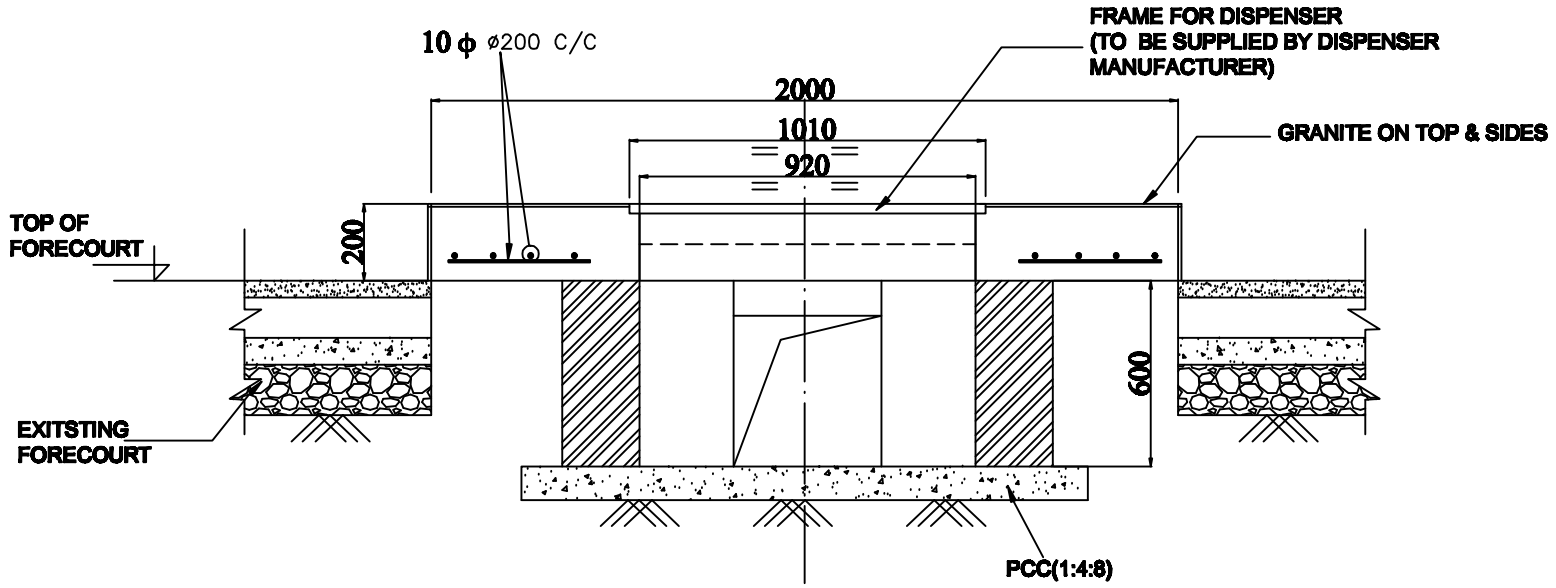

SECTION A-A

NOTES:

1. ALL DIMENSIONS ARE IN MM.
2. ONLY FIGURED DIMENSION ARE TO BE FOLLOWED.
3. ALL R.C.C. USED SHALL BE OF GRADE (1:1 ½ :3) AS PER IS:456-2000. UNLESS OTHERWISE SPECIFIED.
4. ALL R/F STEEL SHALL BE HYSD (FE 415) CONFORMING TO IS:1786.
5. FOR EXACT LOCATION & ORIENTATION OF DISPENSER ISLAND REFER LAYOUT DRAWING.

FOR TENDER PURPOSE ONLY

TITLE:- DETAILS OF DISPENSER ISLAND WITHOUT CANOPY (REINFORCEMENT & SHUTTERING)	DSGN:	CHKD. & VERIFIED:	MNGL	MAHARASTRA NATURAL GAS LIMITED	NORTH
	DRWN:	APPROVED:	CNG & CITY GAS DISTRUBUTION NETWORK PUNE		DATE

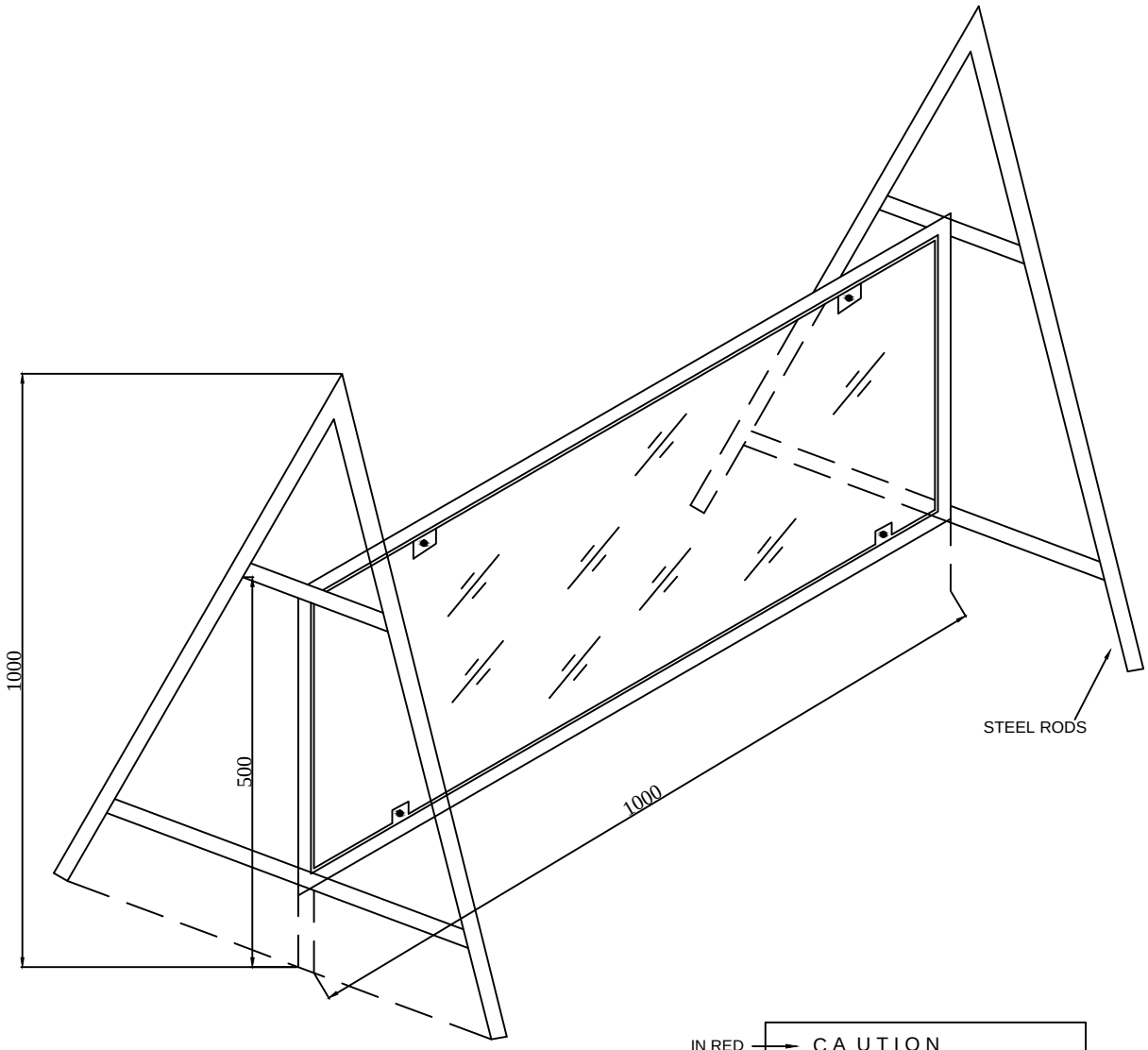

IN RED → C A U T I O N

IN BLACK
W ORK IN PROGRESS
LAYING OF HIGH PRESSURE PIPELINE
CLIENT : CLIENT'S NAME
CONTRACTOR : CONTRACTOR'S NAME
DATE OF COMMENCEMENT :
DATE OF COMPLETION :
EMERGENCY PHONE NOS :

FOR TENDER PURPOSE ONLY

TITLE:- CAUTION BOARD	DSGN:	CHKD. & VERIFIED:	MNGL	MAHARASTRA NATURAL GAS LIMITED	NORTH
	DRWN:	APPROVED:	CNG & CITY GAS DISTRUBUTION NETWORK PUNE		DATE

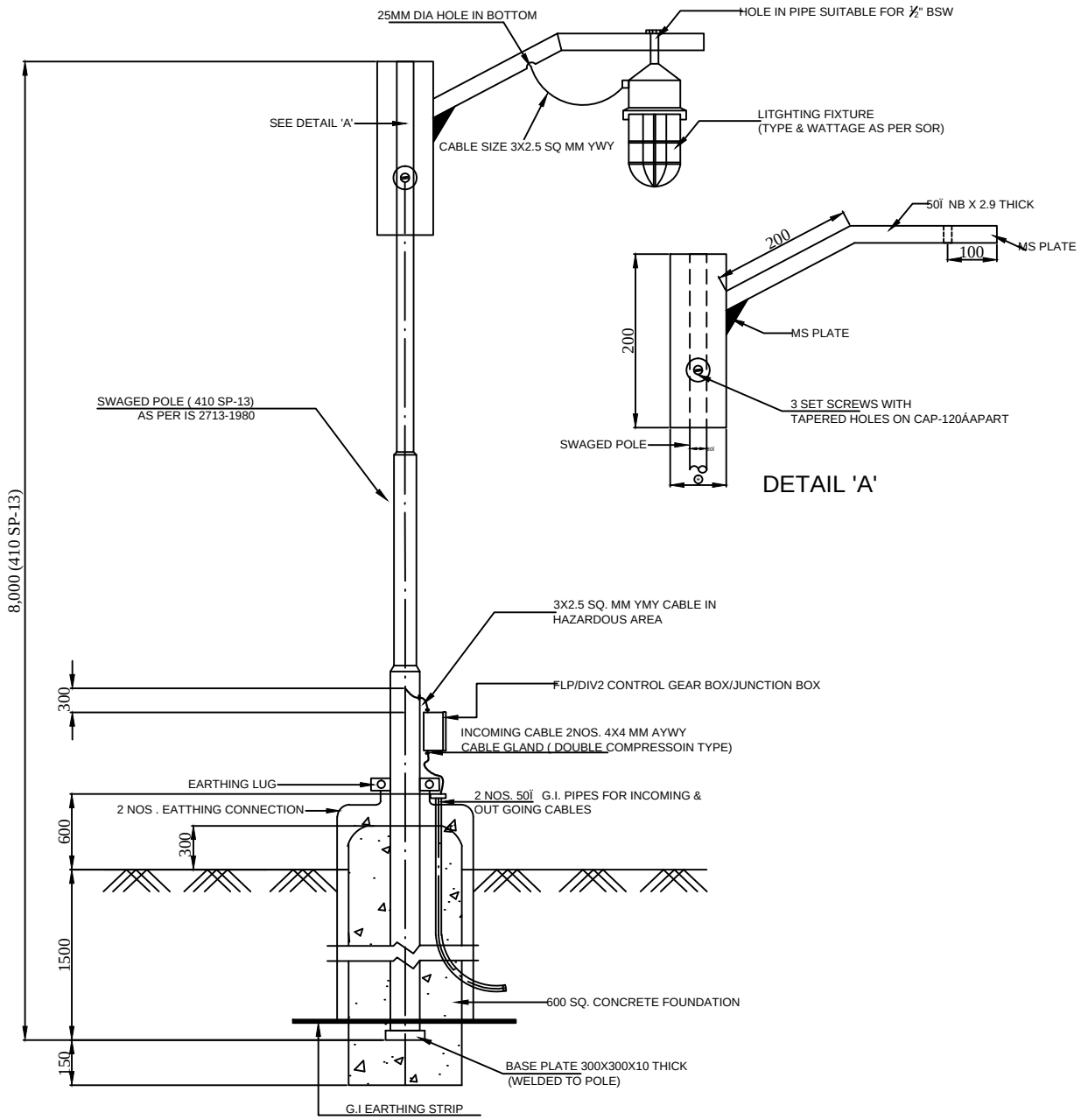

NOTE:-

1. MARSHALLING BOX , JUNCTION BOX & G.I. PIPES FOR CABLES SHALL BE PROVIDED ON THE CABLE TRENCH SIDE.
2. (*) TO SUIT OD (TOP SECTION)

FOR TENDER PURPOSE ONLY

TITLE:- TYPICAL INSTALLATION OF POLE MOUNTED LIGHTING FIXTURE WITH STRAIGHT ARM FOR HAZARDOUS ARES (WITHOUT RUNGS)	DSGN:	CHKD. & VERIFIED:	MNGL	MAHARASTRA NATURAL GAS LIMITED	NORTH
	DRWN:	APPROVED:	CNG & CITY GAS DISTRUBUTION NETWORK PUNE		DATE

PRODUCED BY AN AUTODESK EDUCATIONAL PRODUCT

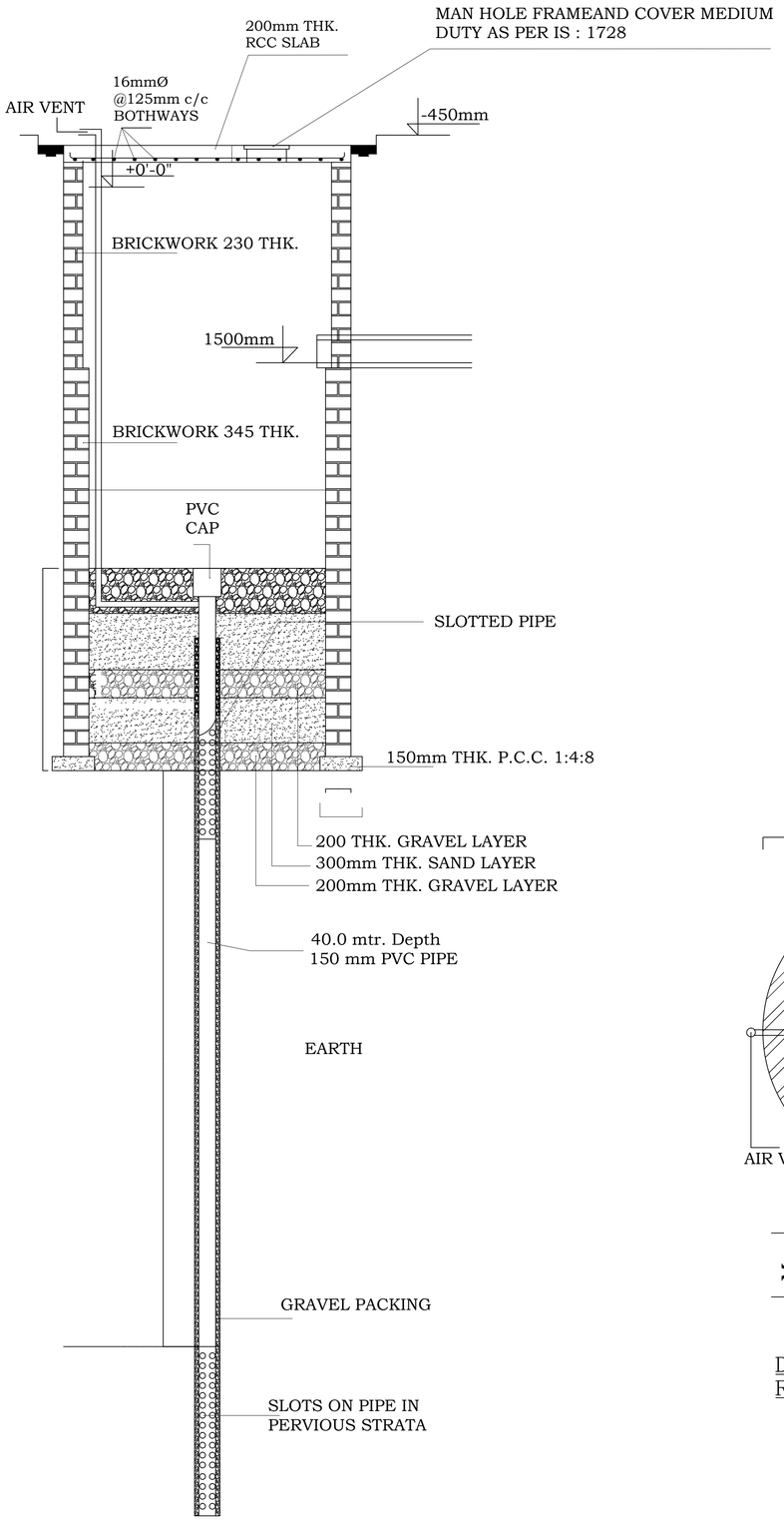

SECTION

RAIN WATER HARVESTING WELL

DETAILS OF PROVISIONS FOR RAIN WATER HARVESTING
SCALE-NTS.

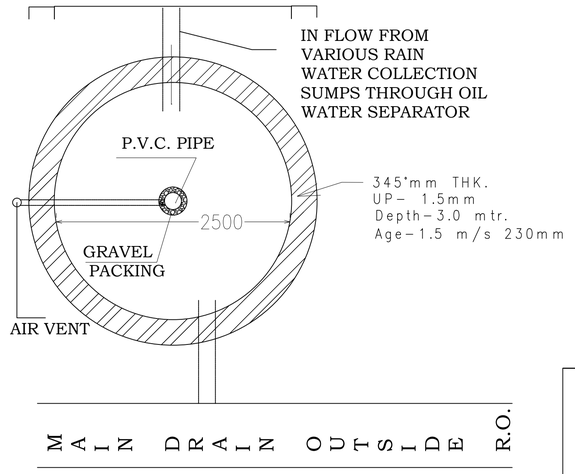

DETAILS OF PROVISIONS FOR
RAIN WATER HARVESTING PIT
SCALE-NTS.

TENDER PURPOSE ONLY

MAHARASHTRA NATURAL GAS LIMITED

PRODUCED BY AN AUTODESK EDUCATIONAL PRODUCT
PRODUCED BY AN AUTODESK EDUCATIONAL PRODUCT
PRODUCED BY AN AUTODESK EDUCATIONAL PRODUCT

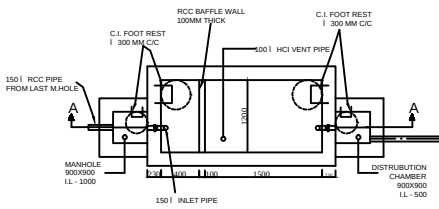

SEPTIC TANK PLAN

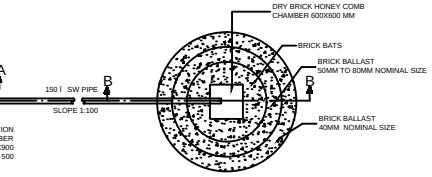

SOAK PIT

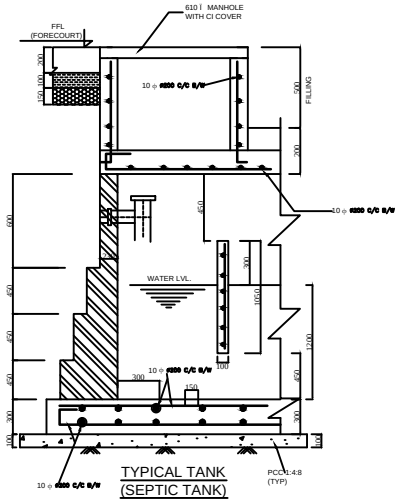

TYPICAL TANK
(SEPTIC TANK)

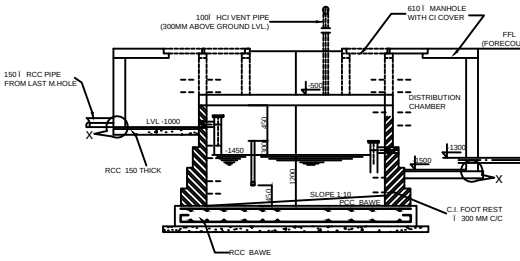

SECTION - AA

DETAIL 'X'

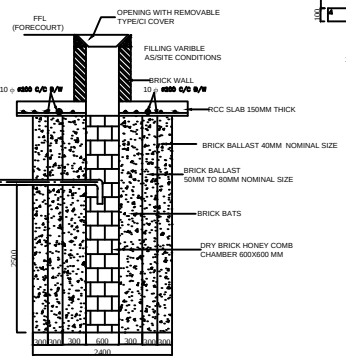

SECTION - BB

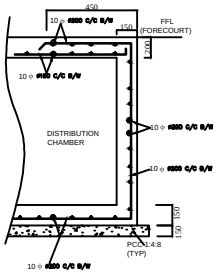

R/F DETAIL OF DESTRIBUTION
CHAMBER (TYP)

FOR TENDER PURPOSE ONLY

TITLE:- TYPICAL DETAIL OF SEPTIC TANK & SOAK PIT	DSGN:	CHKD. & VERIFIED:	MNGL MAHARASTRA NATURAL GAS LIMITED	NORTH
	DRWN:	APPROVED:	CNG & CITY GAS DISTRUBUTION NETWORK PUNE	DATE

PRODUCED BY AN AUTODESK EDUCATIONAL PRODUCT

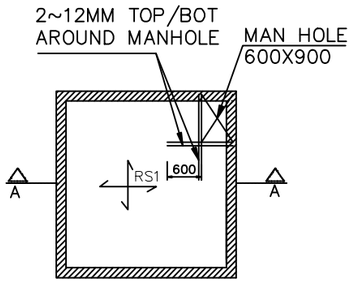

KEY PLAN AT
TANK ROOF LEVEL

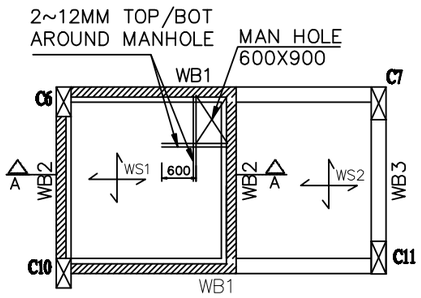

KEY PLAN AT
TANK BOTTOM LEVEL

RCC DETAILS OF BEAMS (CURTAILMENT)

TYPE	OVER ALL SIZE		BOTTOM REINFORCEMENT		TOP REINFORCEMENT			STIRRUPS	REMARKS
	B	D	FULL LENGTH BARS	CURTAILED @ L/7 FROM SUPPORTF	AT CENTER	END SUPPORT	CONTINUOUS SUPPORT		
WB1	230	600	3~ 20mm	2~ 20mm	2~ 12mm	2~ 20mm		~8MM @ 100(6) 150(6) 200C/C	INVERTED
WB2	230	450	2~ 16mm	2~ 12mm	2~ 12mm	2~ 16mm	--	~8MM @ 100(8) 200C/C	INVERTED
WB3	230	300	2~ 12mm	1~ 10mm	2~ 8mm	2~ 12mm		~8MM @ 100(4) 200C/C	

RCC DETAILS OF SLABS

TYPE	THICKNESS	REINFORCEMENT		REMARKS
		SHORT SPAN	LONG SPAN	
WS1	140	~10MM @120C/C	~10MM @120C/C	TWO WAY
RS1	110	~8MM @150C/C	~8MM @150C/C	TWO WAY
WS2	110	~8MM @170C/C	~8MM @200C/C	TWO WAY

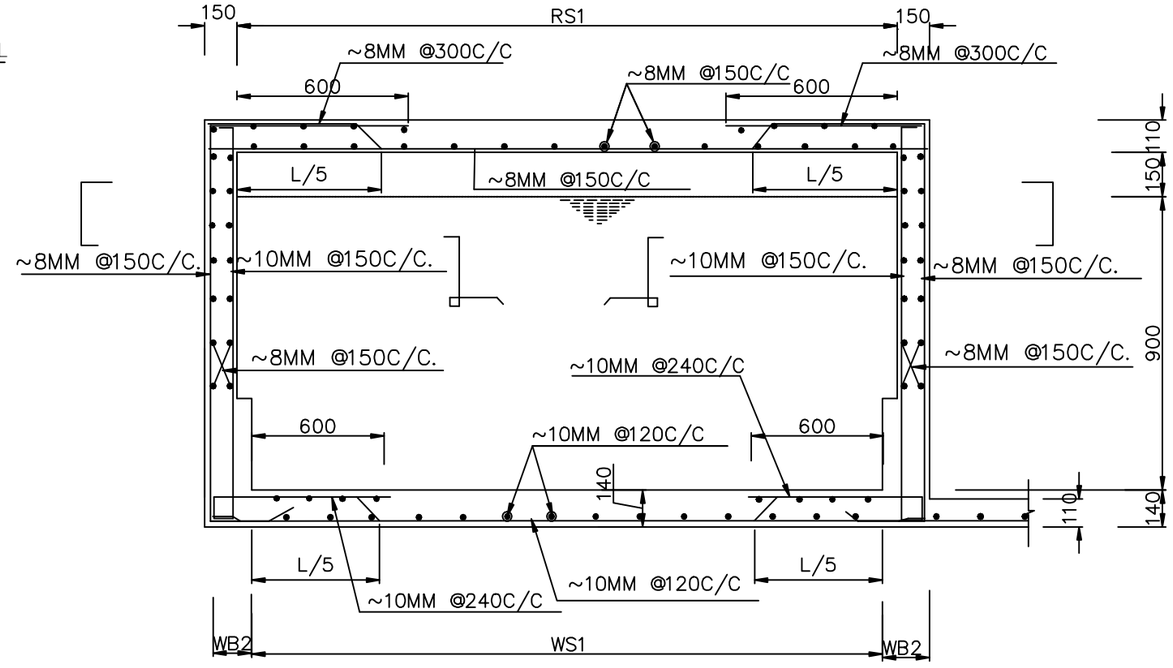

SECTION OF WATER TANK A – A

ADVANCE COPY

NO	DATE	REVISIONS:

NOTES:

- FOR GEOMETRIC DIMENSIONS REFER TO ARCHITECT'S DRAWINGS.
- CONCRETE MIX FOR R.C.C. WORK: M–200 UNLESS STATED OTHERWISE.
- CLEAR COVER TO MAIN REINFORCEMENT
  FOOTING=50mm,COLUMNS=40mm
  BEAMS=30mm,SLABS=25mm
  PILES=50mm
- ALL REINFORCEMENT TO BE C.T.D BARS GRADE Fe–415 EXCEPT ø6 mm IN MILD STEEL.
- SAFE BEARING CAPACITY OF SOIL ASSUMED: TO BE ASCERTAINED BEFORE CONCRETING.
- BUILDING DESIGNED FOR:
  LAPS FOR MAIN REINFORCEMENT
  COLUMNS:–46X DIA OF BAR
  BEAMS & SLABS – 60X DIA OF BAR.
  NO LAPS IN FOOTING REINFORCEMENT.
- CENETRING SHALL BE THE RESPONSIBILITY OF CONTRACTOR.

FOR TENDER PURPOSE ONLY
U/G WATER TANK(INDICATIVE)

MAHARASHTRA NATURAL
GAS LIMITED

PRODUCED BY AN AUTODESK EDUCATIONAL PRODUCT
PRODUCED BY AN AUTODESK EDUCATIONAL PRODUCT
PRODUCED BY AN AUTODESK EDUCATIONAL PRODUCT

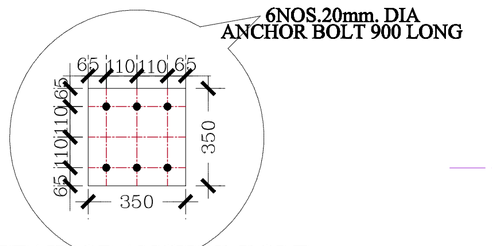

DETAIL OF ANCHOR BOLT
SIZE=500X500

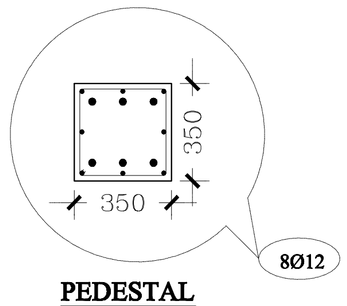

PEDESTAL
SECTION AT-BB

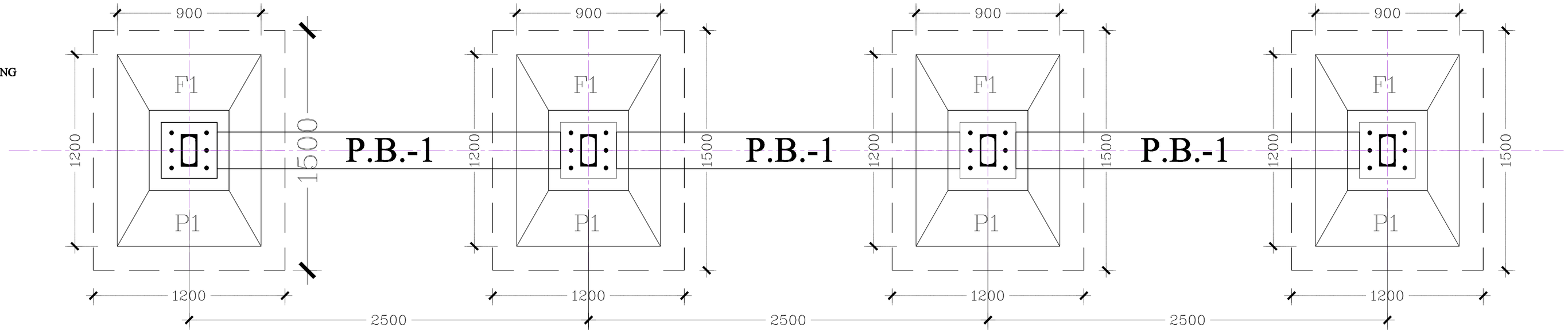

FOUNDATION LAY-OUT PLAN

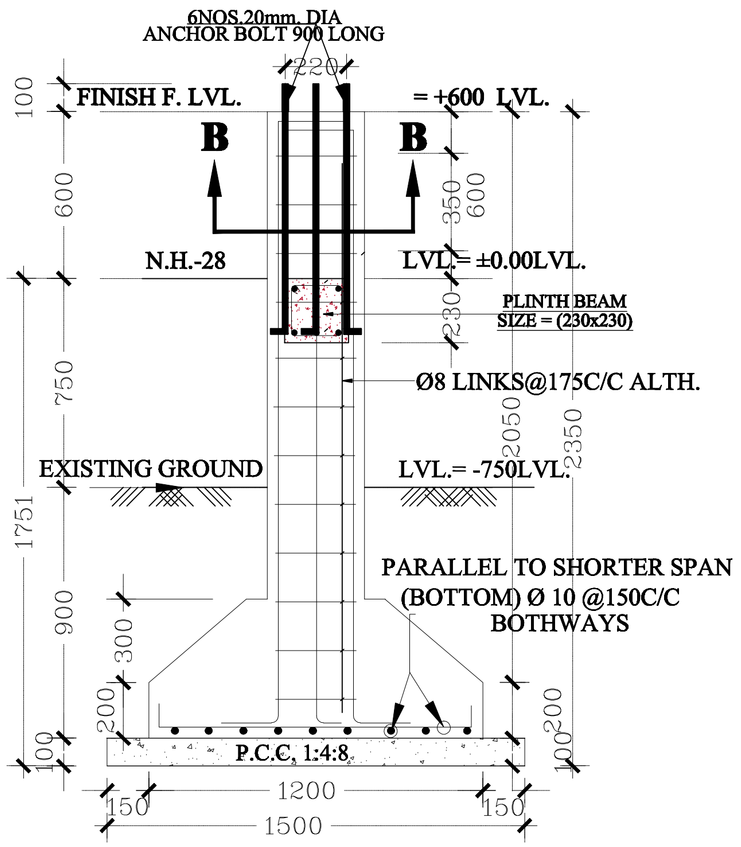

SECTION AT-AA

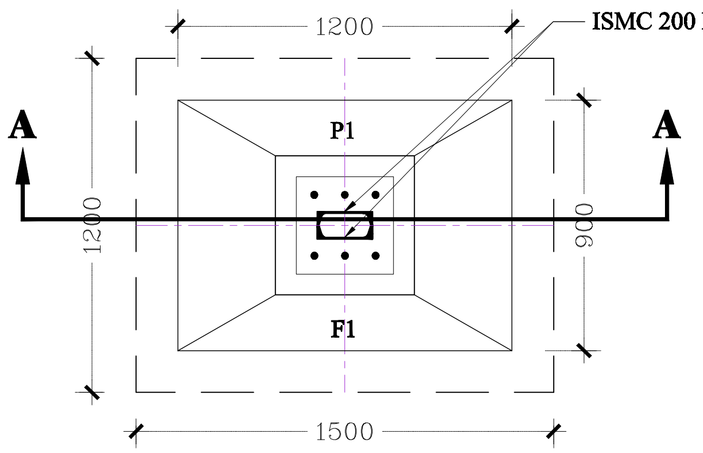

FOOTING DETAIL OF-F1P1
FOOTING SIZE=900X1200

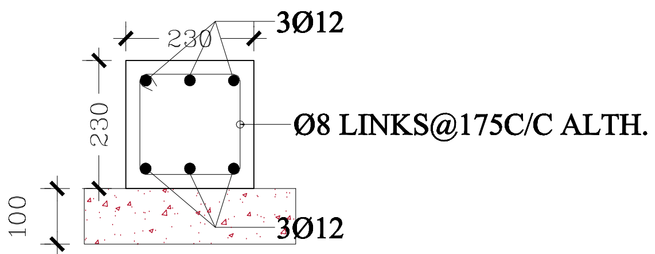
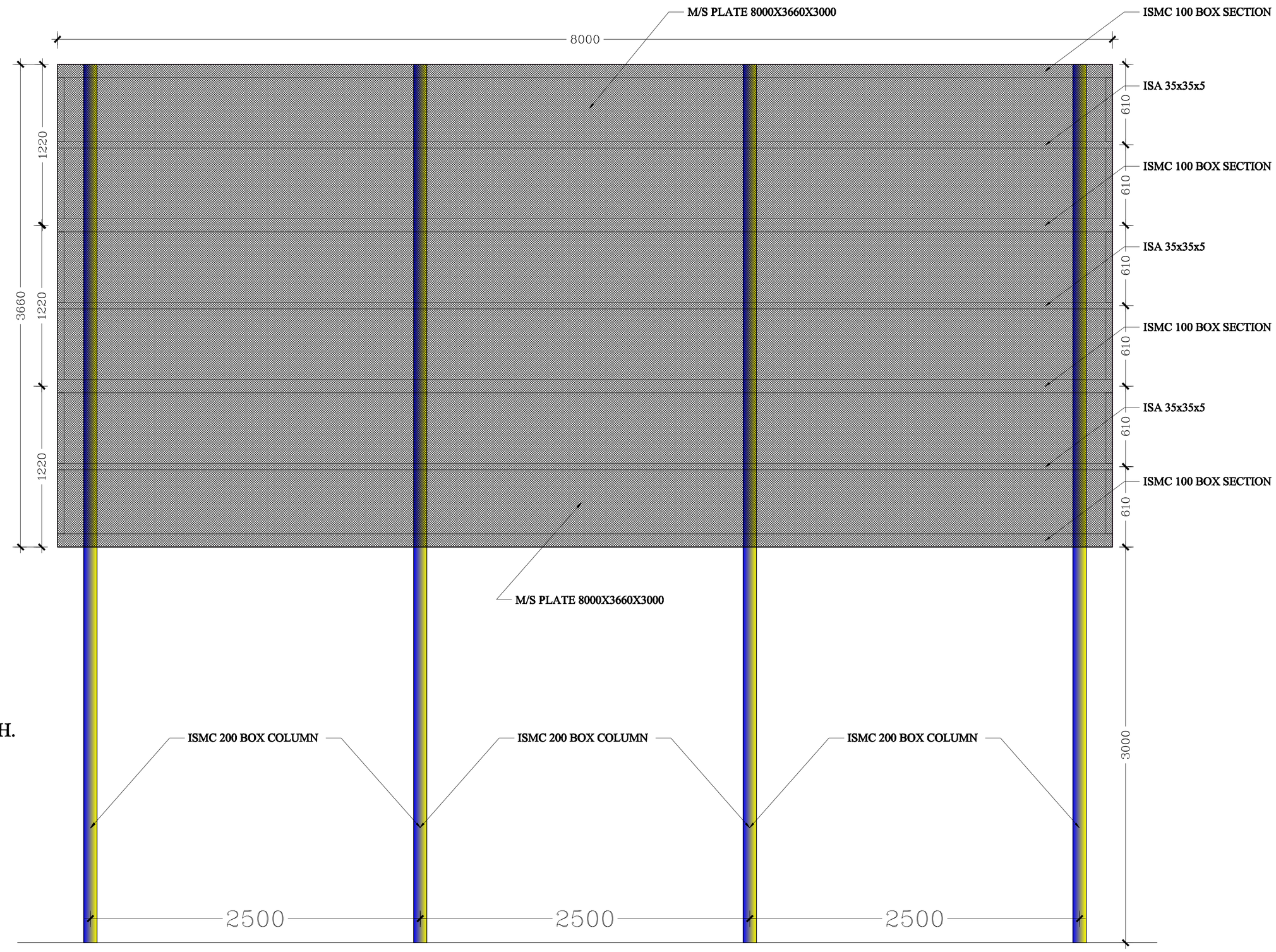
PLINTH BEAM
SIZE = (230x230)